UNIVERSITY OF GLASGOW

Degrees of MEng, BEng, MSc and BSc in Engineering

ROBOTICS 4 (ENG4118)

15th May 2012
14:00 – 17:00

Attempt ANY TWO questions from SECTION A
and ANY TWO questions from SECTION B

The numbers in square brackets in the right-hand margin indicate the marks allotted to the part of the question against which the mark is shown. These marks are for guidance only.

An electronic calculator may be used provided that it does not have a facility for either textual storage or display, or for graphical display.

Continued overleaf

SECTION A: [50 Marks]
Attempt ANY TWO questions from this section

Q1 (a) Explain, with the aid of diagrams, the meaning of the terms "input and output dynamic range", "sensitivity" and "sensor drift" [4]

(b) An incremental encoder has a single track of uniformly spaced windows, M, around the circumference of the encoder disk. The encoder is used to measure shaft position over the range $\pm\ \theta_m$. If the maximum possible pulse count is N pulses, derive an expression relating the angle, θ, moved by the disk to the number of pulses, n, counted. If the number of binary digits used for the counter is r, derive expressions from which the overall displacement resolution of the encoder could be found, allowing one binary digit to be used to represent the sign. Hence, find the overall displacement resolution for the case when $\theta_m = 200°$, $M = 50$ and $r = 16$. [6]

(c) Briefly describe five different types of proximity sensor and the material of objects which can be detected. [5]

Q2 (a) Derive an expression for the final temperature of a motor in terms the thermal resistance between the motor an ambient temperature in addition to the heat and friction generated within the motor. [5]

(b) A brushed DC motor is used to drive a robotic limb as shown on Figure Q2d. Draw the block diagram for this actuator and from this derive the transfer function relating the output load angle (θ_L) to the input voltage (V_{dc}). Confirm that for the actuator shown on Figure Q2d the transfer function is: [10]

$$\frac{\theta_L}{V_{dc}} = \frac{0.055}{s.(0.028s + 0.055)}$$

Continued overleaf

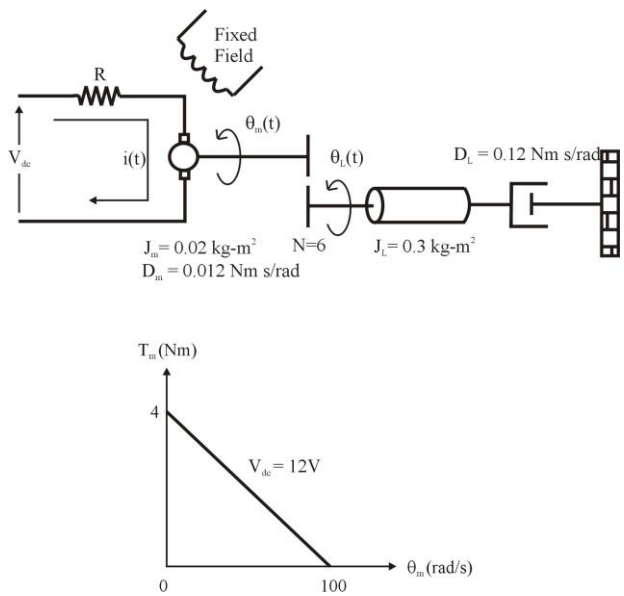

Figure Q2d

Q3 (a) A joint of a six-axis robot is required to travel from an initial angle of 5º to a final angle of 80º in 10 seconds. Assuming zero initial and final velocities and adopting a polynomial position reference solution calculate the necessary polynomial coefficients. Also calculate the initial acceleration. [5]

(b) It has subsequently been found that the actuator can only produce an initial acceleration of 20º/s^2. Calculate the new polynomial position reference to satisfy this additional constraint [7]

(c) It has been decided to replace the polynomial position reference control with a trapezoidal control strategy. Given an acceleration time of 0.5 seconds (tb) and an equal deceleration rate calculate the required cruising speed to satisfy the requirements of Q3a. Also calculate the resultant acceleration rate. [3]

Continued overleaf

SECTION B: [50 Marks]
Attempt ANY TWO questions from this section

Q4. (a) By considering appropriate kinematic transformations, prove that the transformation matrix for the manipulator and end-effector shown in Figure Q4 can be represented thus:

$$
{}^{U}T_{H} = \begin{bmatrix} C\phi_a C\phi_o & C\phi_a S\phi_o S\phi_n - S\phi_a C\phi_n & C\phi_a S\phi_o C\phi_n + S\phi_a S\phi_n & RS\alpha \cdot C\beta \\ S\phi_a C\phi_o & S\phi_a S\phi_o S\phi_n + C\phi_a C\phi_n & S\phi_a S\phi_o C\phi_n - C\phi_a S\phi_n & RS\alpha \cdot S\beta \\ -S\phi_o & C\phi_o S\phi_n & C\phi_o C\phi_n & RC\alpha \\ 0 & 0 & 0 & 1 \end{bmatrix}
$$

Here C = cos and S = sin. [7]

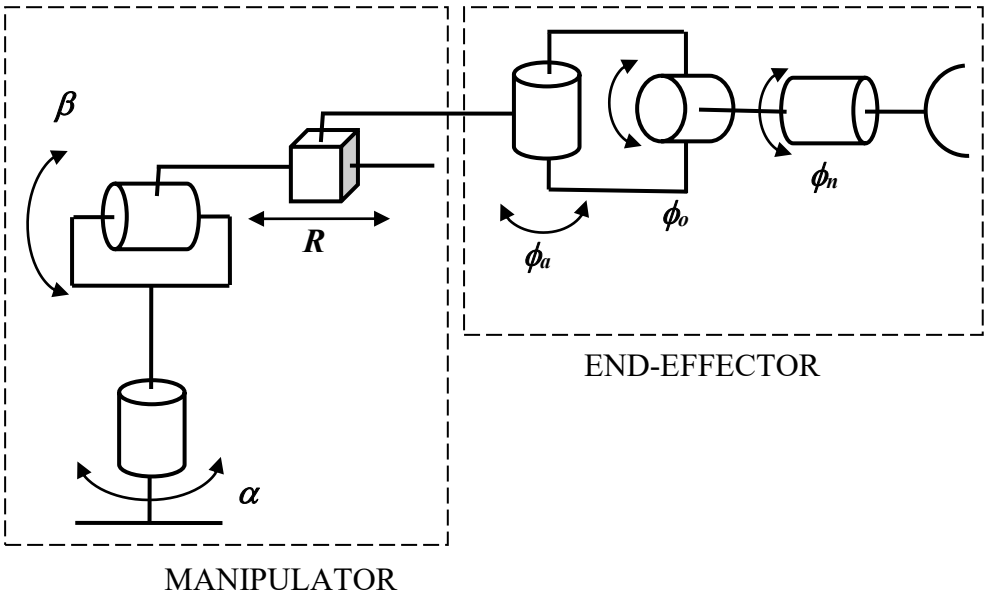

Figure Q4

(b) The manipulator and end-effector have the position and orientation profile shown in Table Q4.

Position	(0.8387, 0.2247, 4.9240)
Normal	(0.0802, 0.9170, -0.3907)
Orientation	(-0.6803, 0.3369, 0.6509)
Approach	(0.7285, 0.2136, 0.6509)

Table Q4

Determine the manipulator and end-effector joint variables required to achieve this profile. [8]

Continued overleaf

Q5. (a) Use the *Denavit-Hartenberg Representation* to derive the kinematic transformation matrix ${}^{U}T_{H}$ for the manipulator shown in Figure Q5. This manipulator consists of 4 revolute joints (joints 1, 3, 4, 5) and a prismatic joint (joint 2). Specific dimensions of the robot are labeled a – d and angles α - δ.

[15]

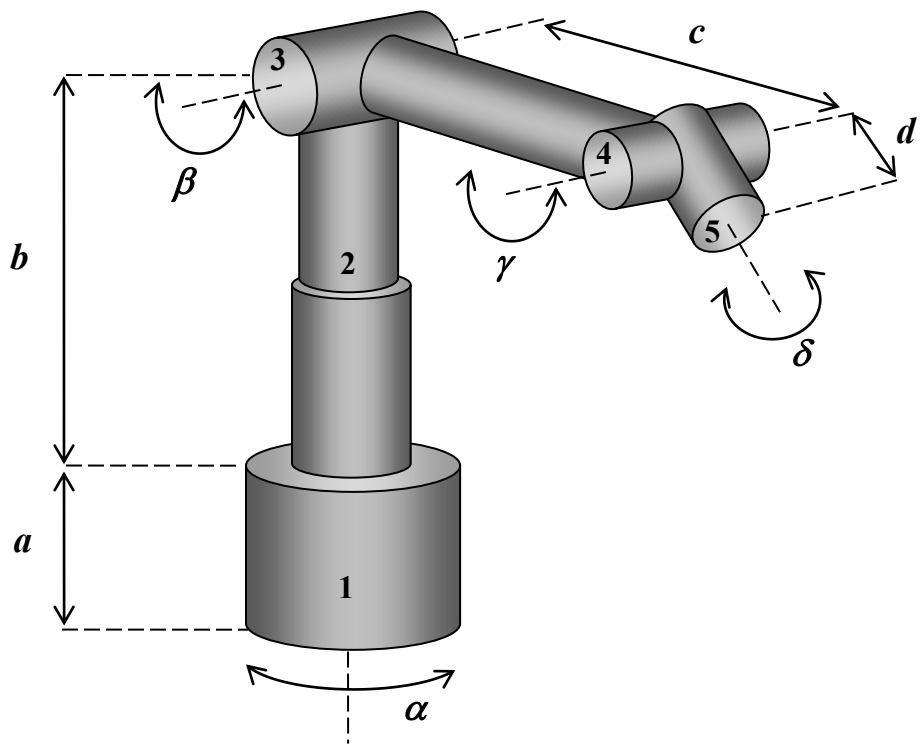

Figure Q5

Continued overleaf

Q6. (a) The *Denavit-Hartenberg* transformation matrices below describe the successive joints from 1 to 6 for a particular robot manipulator with end-effector.

$$A_1 = \begin{bmatrix} C\theta_1 & -S\theta_1 & 0 & 0 \\ S\theta_1 & C\theta_1 & 0 & 0 \\ 0 & 0 & 1 & 0 \\ 0 & 0 & 0 & 1 \end{bmatrix}, \; A_2 = \begin{bmatrix} 1 & 0 & 0 & 0 \\ 0 & 1 & 0 & 0 \\ 0 & 0 & 1 & d_2 \\ 0 & 0 & 0 & 1 \end{bmatrix}, \; A_3 = \begin{bmatrix} 1 & 0 & 0 & 0.25 \\ 0 & 0 & -1 & 0 \\ 0 & 1 & 0 & d_3 \\ 0 & 0 & 0 & 1 \end{bmatrix}$$

$$A_4 = \begin{bmatrix} C\theta_4 & 0 & -S\theta_4 & 0 \\ S\theta_4 & 0 & C\theta_4 & 0 \\ 0 & -1 & 0 & 0 \\ 0 & 0 & 0 & 1 \end{bmatrix}, \; A_5 = \begin{bmatrix} C\theta_5 & 0 & S\theta_5 & 0 \\ S\theta_5 & 0 & -C\theta_5 & 0 \\ 0 & 1 & 0 & 0 \\ 0 & 0 & 0 & 1 \end{bmatrix}, \; A_6 = \begin{bmatrix} C\theta_6 & 0 & S\theta_6 & 0 \\ S\theta_6 & 0 & -C\theta_6 & 0 \\ 0 & 1 & 0 & 0 \\ 0 & 0 & 0 & 1 \end{bmatrix}$$

For a particular force control operation of this manipulator the following joint variable values are employed:

$\theta_1 = 30°$, $d_2 = 2.25$m, $d_3 = 1.75$m, $\theta_4 = 15°$, $\theta_5 = 47°$, $\theta_6 = 32°$

(i) Using these joint values, derive the Jacobian for the robot manipulator's end effector defined by the transformation matrices above.

[13]

(ii) Hence or otherwise, calculate the required force and torques at each of the joints for the following desired forces/torques for the end effector:

$${}^{H}F = [22.0, 3.2, 4.7, 6.4, 7.2, 3.1]^{T}$$ [2]

End of question paper